FTL 51 installation on Gasso Top Loading arms

<u>FTL 51 explantion.</u>

Endress + Hauser Liquiphant FTL51 (L=600mm)& nivotester FTL320 type is used to prevent overfill during top loading applications on Gasso Top loading arms.
In order to prevent any damage to the FTL sensor, the sensor tube will be mounted in a protection pipe along side the drop tube. The output signal from the overfill device is intrinsically safe. The wire from the overfill device will be connected to a junction box on the primary arm,and or directly to the final connection.
Either via a junction box in EX zone, or directly to none EX zone, the wire will be connected along side the loading arm up to the inlet flange. An amplifier supplied normally by the customer has to be installed by the customer in a "hazardous safe area". Supply voltage to the amplifier can be 24, 110 or 220 V.

Either a single sensor as standard can be used and or as option double sensors for high and high-high control.

FTL 51 installation on Gasso Top Loading arms

For the installation of the FTL 51 overfill sensor on the Gasso top loading arms we have following alternative solutions for the connection to any type of flow computer and or PLC available

FTL 51 connection on Gasso top loading arms

1-
With spider assembly on droptube.

2-
On vapor cone of droptube

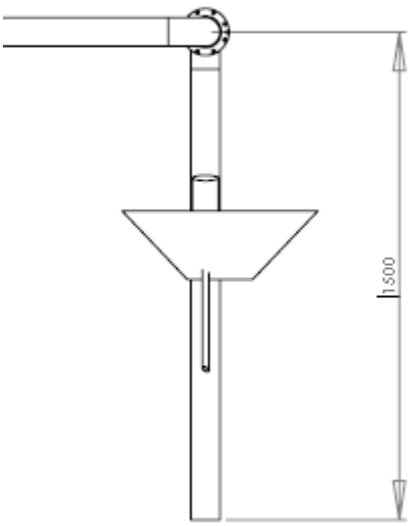

FTL 51 installation on Gasso Top Loading arms

The connection depends if the zone connection is EX and or not EX.

1-
For EX zone connections

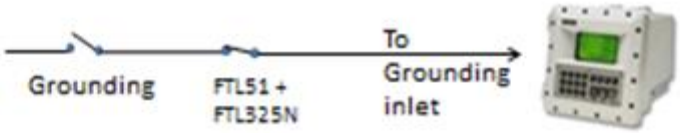

1. Grounding device has a contact normal open, when thre operator put the clamp to truck the contact will be closed, loading can start
2. FTL 51 + FTL325N has a contact normal closed. When the liquid will touch FTL51 (overfill) the contact will be open and Contrec will stop loading

As barrier/switch/amplifier all the same words we use the FTL 325N-F1A1-230V which as shown above can be put in line with the grounding monitor connection which goes to the input of the flow computer

Version 1 (with out PLC) all equipments are mounted in EX zone

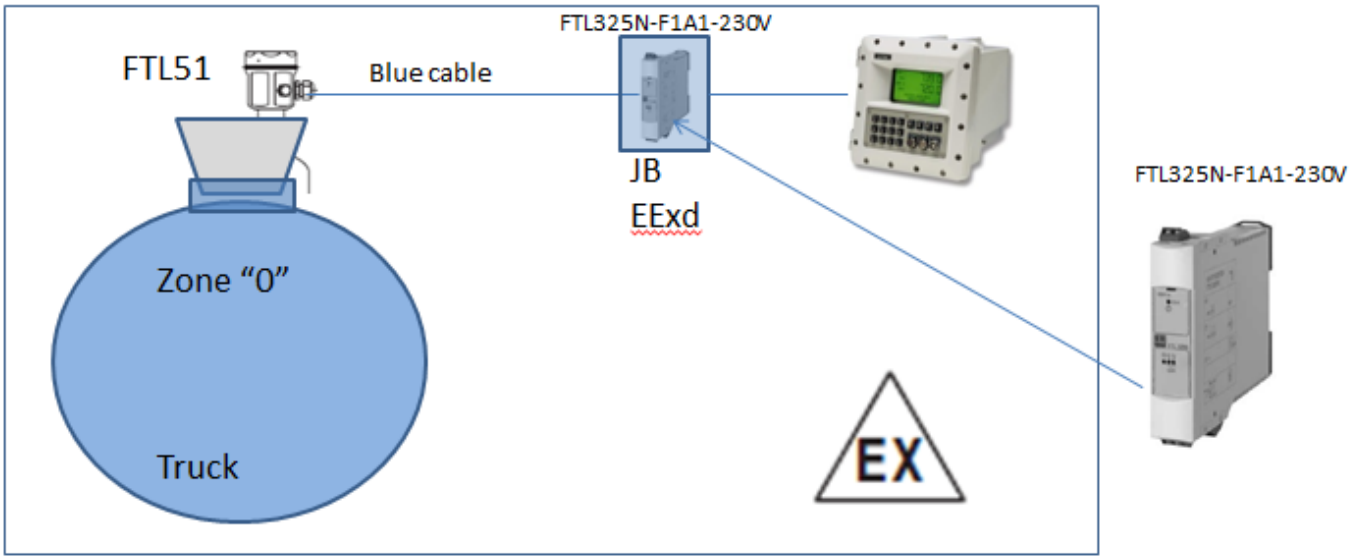

FTL 51 installation on Gasso Top Loading arms

2-
For NONE EX zone connections

You need PLC if you have motorised valves to select different products gas detector,switches for loading arm positions , and or other permissive equipments (card reader etc.)
The PLC can be dimensioned to accept all equipments , and will be programed to accept start loading if all conditions are ok.
For a simple metering skid for loading a PLC is not necessary.